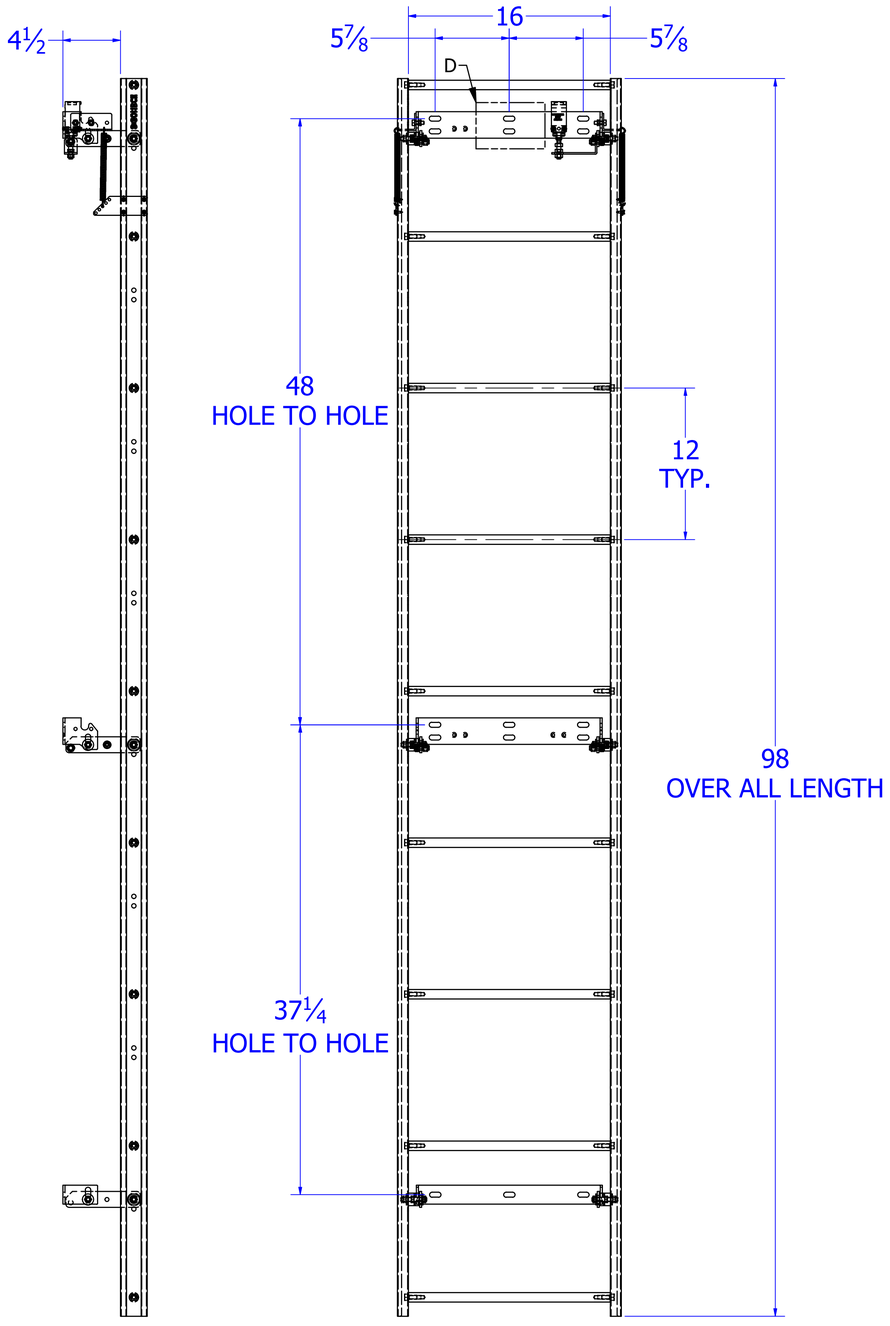

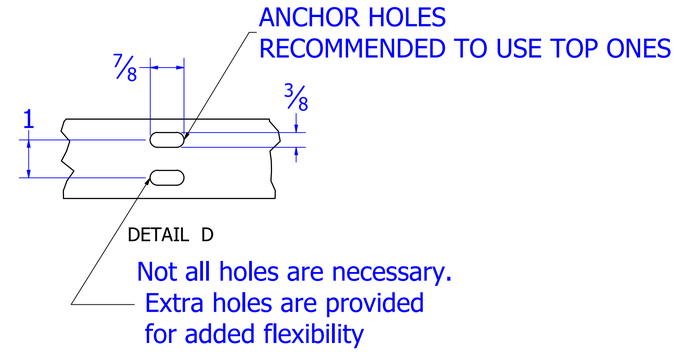

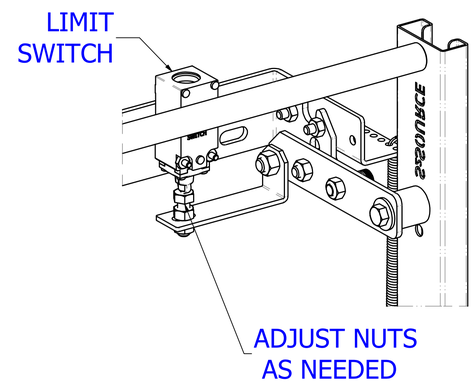

- THIS LADDER IS NON-RETRACTABLE.
- THE SWITCH ACTIVATES WHEN A MINIMUM FORCE OF 20 LBS IS APPLIED.
- A SPRING MECHANISM RETURNS THE LADDER TO ITS ORIGINAL POSITION WITH APPROXIMATELY 1.00 INCH OF MOVEMENT.

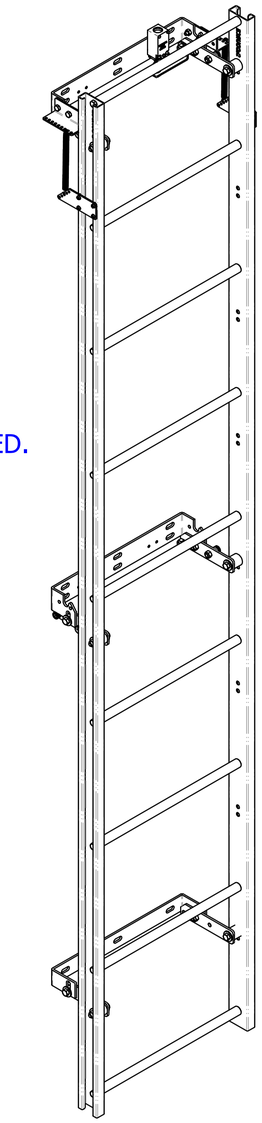

INSTALLATION NOTES:

THE LADDER MUST BE INSTALLED IN THE FULLY UNFOLDED POSITION, WITH WALL BRACKETS AT 90 DEGREES TO THE SIDES.

WEIGHT : 32.763 lbmass

TOLERANCES
.X +/- .125
.XX +/- .060
.XXX +/- .020

DRAWN S2	9/28/2025	**S2 SOURCE** LONGWOOD, FL
CHECKED		TITLE: STATIONARY PIT LADDER, PER CODE 2022, WEIGHT ACTIVATED 16" WIDE, 98" LG.
QA		
MFG		
APPROVED		SIZE D / DWG NO **S2-CLIMBER-ST22-16098** / REV 00
		SCALE NTS / SHEET 4 OF 6